Hillmar
Hillmar Industries Ltd.
7371 Vantage Way
Delta, BC V4G 1C9
P:604 946-7115 F:604 946-0329
info@hillmar.com www.hillmar.com

WHEEL CHOCK TWCS
TWCS-100-0711-1040-LH
SPECIFICATION SHEET
SLS & MKTG
ENGLISH

Sheet Number:			
Job Number:			
Form Number: 229-411-41455PT			
Company / Project Reference:	Date.:	Page.: 1 OF 1	Document Package No.: / Rev.:

Inventor Drawing

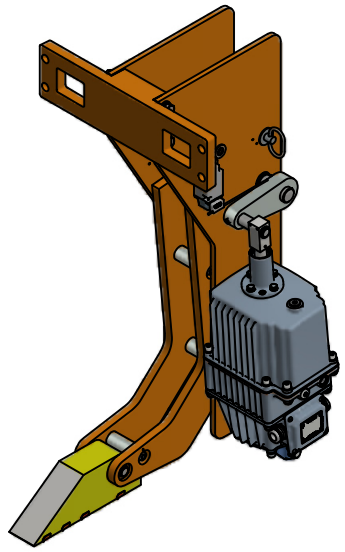

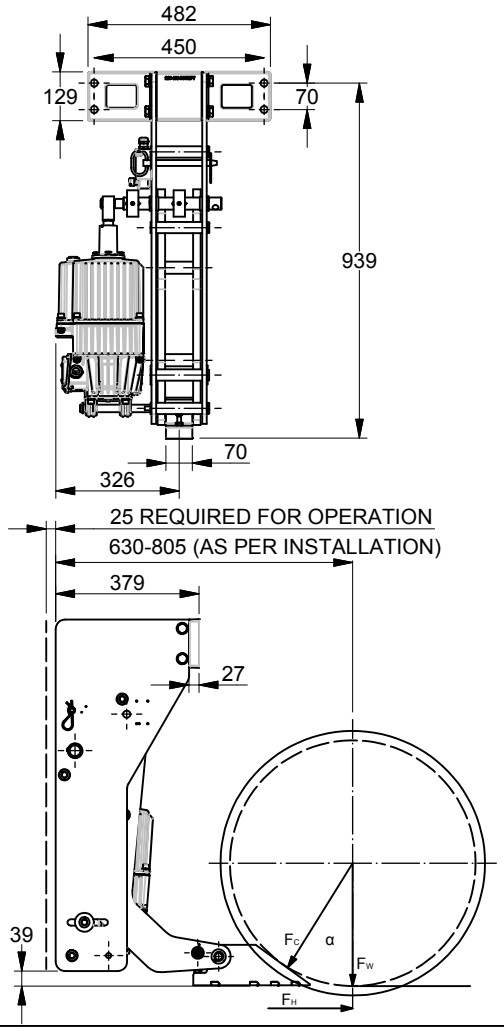

FEATURE	CODE
Wheel chock model	TWCS
Size	100
Wheel tread diameter	0711-1040
Model handing	LH

Example for ordering	TWCS-100-0711-1040-LH

TECHNICAL DATA

Maximum holding force (kN) (Depending on wheel loading F_W)	100
Wheel tread diameter (mm)	711-1040
Wheel diameter	W_D
Wheel load	F_W
Clamping force	F_C
Holding force	F_H
Force angle	$\alpha=36^\circ$
Clamping force calculation	$F_C = F_W \times \cos \alpha$
Holding force calculation	$F_H = F_C \times \mu$
Mounting holes	4 x Ø19
Mounting bolts (CL 10.9)	4 x M16
Standard painting color SAFETY YELLOW	RAL #1006
Weight including thruster (kg)	130

NOMINAL SPECIFICATION

Refer to design kinematic drawing for installation details.

One kinematic drawing is available for each wheel size

NOTES

All figures are nominal figures only.

All dimensions are in millimeters.

International patents apply.

Document Template #710-101-62058

** ALL TECHNICAL DATA IS SUBJECT TO CHANGE WITHOUT NOTICE **

Hillmar works have a fully registered ISO 9001-2008 quality assurance programme (QCB #01-1525)

C:\Vault_Workspace\HILLMAR\HILLMAR PRODUCTION\02 STORM BRAKES\0700-2\07002010 TWCS\02 SPC-SHT-TWCS\41455 TWCS-100-0711-1040-LH.idw